The International Journal of
NAUTICAL ARCHAEOLOGY

*The International Journal of Nautical Archaeology* (2018) **47**.2: 460–471
doi: 10.1111/1095-9270.12299

Note

# Copper and Muntz Metal Sheathing: a global update

An earlier article published in this journal that examined copper and other sheathing in the Royal Navy in the late 18th, 19th and 20th centuries prompted worldwide interest in this previously little-investigated subject. It included a catalogue of sheathing stamps that indicate manufacturer, application date, dockyard, Admiralty inspectors' marks and Government broad arrows, and sheet weights recovered from HMS *Pomone*, HMS *Victory*, HMS *Tincomalee*, and HMS *Maeander* (Bingeman *et al.*, 2000: 218–229). While the original article concentrated on examples from Royal Naval warships, this update, while including warship sites, is mainly devoted to non-warships. Muntz metal, a 60:40% copper-zinc metal patented in 1832, with slightly varying ratios entirely superseded copper sheathing in the merchant service (Percy, 1861: 619). While recorded sheathing marks cover only a fraction of marks used in the 18th and 19th centuries, this article incorporates further examples by introducing countermarked coins that more than double previously known marks. These countermarked coins represent marks that were applied to numerous copper sheets during the course of naval ship building (Bingeman *et al.*, 2000: 227).

The question has been asked why the Admiralty required every copper sheet to show its month and year (Bingeman *et al.*, 2000: 223). In his lecture to the Institution of Naval Architects in 1863, W.J. Hay, Admiralty Chemist and Lecturer at the Royal College, Portsmouth, clearly identified the problem they were trying to solve in the late 18th century: why was some copper sheathing 'good', while other apparently similar copper was 'bad' (Hay, 1863: 91–94). Modern analysis shows that 'good' copper contained a small quantity of impurities giving a steady rate of erosion that provided the desired anti-fouling effect (Bingeman *et al.*, 2000: 224). There were two distinct types of 'bad' copper. Pure copper was bad since it eroded in less than two years and was found to be unsuited for sheathing. Copper with too many inclusions, usually iron, does not deteriorate providing no anti-fouling effect at all (Bonnefoux and Paris, 1856: 253). Hay (1863: 87, 93) used the dates on copper sheathing to reference its condition, for instance writing 'with copper bearing a date subsequent to 1833' or 'of the quality of the copper commenced 1832–3'. This combination of evidence clearly shows the importance of knowing when a ship was coppered (Bingeman *et al.*, 2000: 223).

It is now clear that before precise chemical analysis existed in the second half of the 20th century, the Admiralty had no understanding why some copper was good while apparently similar copper was bad. To establish the difference between the good and bad coppers, the Admiralty dated all ships' copper sheathing to know how long it remained serviceable by identifying the dockyard, manufacturer and the date of coppering. To-date, no one has come up with an alternative explanation as to why each copper sheet was dated on all Royal Naval ships.

## Royal naval ships

In the late 18th century and in the early years of the 19th century, the British Admiralty continued to buy in sheathing from the Mines Royal Company until the Portsmouth Rolling Mill was built 1804–06 (NMM, 1804). At the time, the Admiralty had a large stock of used copper sheathing that needed recycling. Current research found the latest use of Mines Royal copper was on the 64-gun *Agamemnon* wrecked in Maldonado Bay, Uruguay, at the entrance to the River Plate on 16 June 1809, which had been re-coppered at Chatham Dockyard in 'JAN 1807' (Fig. 1a, Table 1) and the sheathing displayed the mark 'MR 28', indicating the use of 28oz per square foot plate (Fig. 1b-c).

The 38-gun *Pomone* wrecked at the Needles, Isle of Wight, 14 October 1811, bore a similar Mines Royal Company sheathing mark of 'MR 32' (Fig. 1d). It is assumed that *Pomone* was coppered with sheets supplied by Chatham Dockyard due to the presence of the stamp 'C' above 'DEC 1804' (Fig. 1e). The ship was built at Brindley's Yard at Frindsbury, exactly opposite the Royal Yard on the other side of the Medway River. Possibly Brindley subcontracted the task to the Royal Dockyard since the sheathing displays the Chatham mark. *Pomone* was launched on 17 January 1805 (Tomalin *et al.*, 2000).

The 36-gun *Sirius* was destroyed by fire at Mauritius to avoid capture by the French on 25 August 1810. Copper sheathing recovered from the wreck had 'C' for Chatham above 'SEP 1808' (Fig. 1f). It appears that Chatham Dockyard used copper supplied by Portsmouth Rolling Mill marked 'P° 28' (Fig. 1g).

On 15 February 1811, the 36-gun *Amethyst* was anchored in Plymouth Sound waiting to be provisioned before sailing to join the fleet off Brest. Captain Jacob Walton had decided to use only the bower anchor

© 2018 The Authors. International Journal of Nautical Archaeology © 2018 The Nautical Archaeology Society.
Published by John Wiley & Sons Ltd. 9600 Garsington Road, Oxford OX4 2DQ, UK and 350 Main Street, Malden, MA 02148, USA.

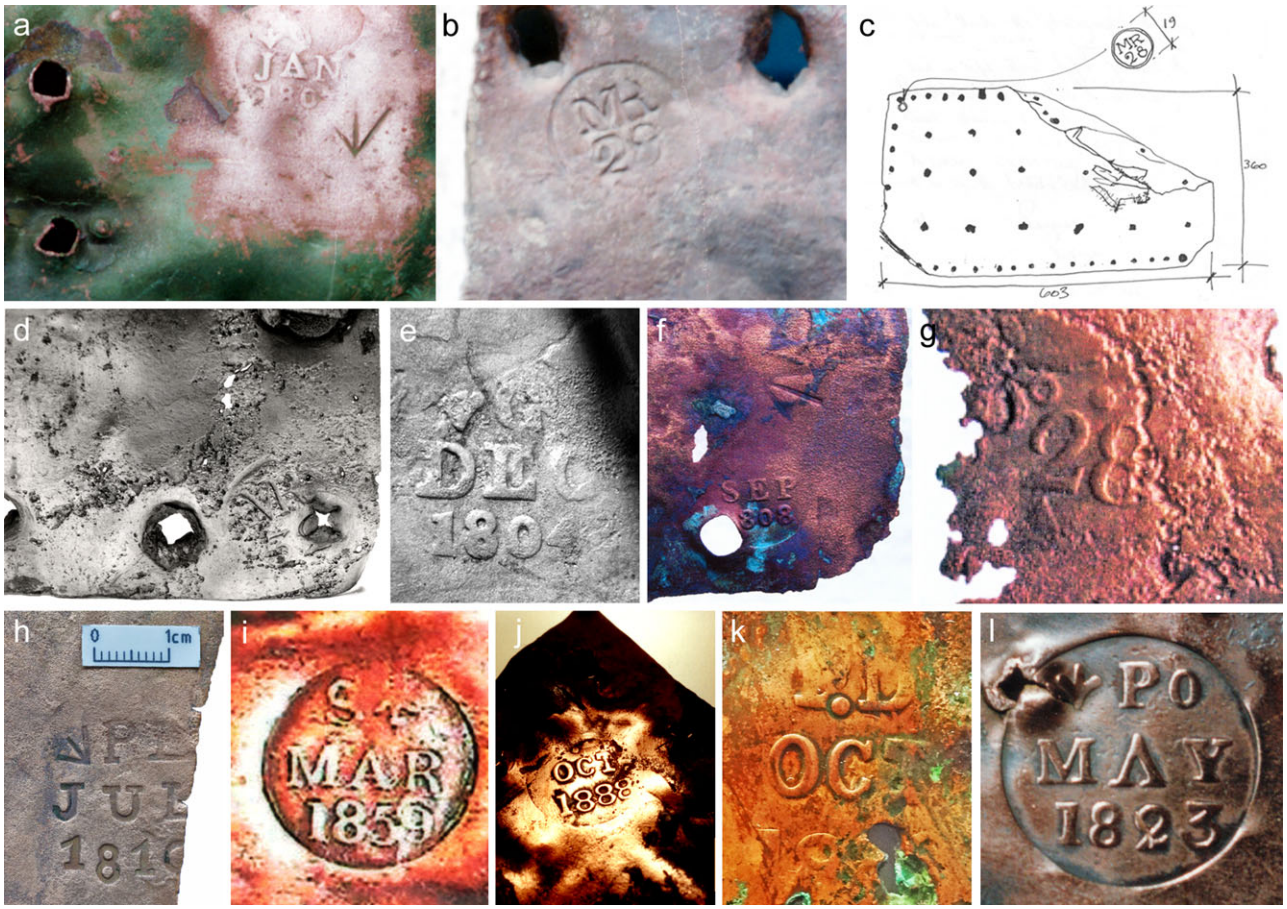


*Figure 1.* Sheathing marks found on Royal Navy ships HMS *Agamemnon* (1809), HMS *Pomone* (1811), HMS *Sirius* (1810), HMS *Forte* (1856–1906) and HMS *Victory* (1768–present), see Table 1.

for what was expected to be a short period when a sudden storm drove the ship on to Cony Cliff Rocks; the ship was badly damaged and became a total loss. All but eight of the crew survived; the Captain and his Master, Robert Owen, were court-martialled and held responsible for the ship's loss. A rectangular 32oz, 158 × 132 × 0.8mm copper plate (Fig. 1h) recovered from within *Amethyst's* hull was found to have a Plymouth Dockyard sheathing mark (pers. comm. Mallory R. Haas, 9 February 2018).

Following Queen Victoria and Prince Albert's visit to Plymouth Dockyard in September 1843, and a petition by the townspeople, authority was given for it to be renamed Devonport Dockyard. This clearly defines the difference between the Royal Dockyard and Plymouth commercial docks. It would be interesting to discover whether Devonport Dockyard continued to use 'PL' or subsequently introduced a variation of 'D'.

HMS *Forte*, a 3456-ton, screw-powered, 51-gun frigate built at Deptford and launched 29 May 1858, had been coppered and marked 'S' above 'MAR 1859', which indicates that the ship went downstream to Sheerness Dockyard for this task (Fig. 1i). HMS *Forte's* first deployment was in 1860 as the flagship of Rear-Admiral Sir Henry Keppel, on the Cape of Good Hope and West Coast of Africa station. In 1880, renamed HMS *Pembroke*, the ship became the Chatham Naval Base 'Receiving Ship', before finally becoming a coal hulk in 1894. *Forte* caught fire by accident and sank on 23 November 1905 off Sheerness (Colledge and Warlow, 2006: 131). Copper sheet from this wreck was recovered by Medway Diving Contractors Limited in 1980 during dredging and removal of obstructions for the channel leading to the Isle of Grain container terminal. The sheet was on display at the Historical Diving Society stand during the 2001 *Festival of the Sea* in Portsmouth Dockyard. The date stamp shows that some of the original coppering had survived throughout the ship's life.

HMS *Victory* (1768–present), the 100-gun First Rate built at Chatham Dockyard, spent her final years as a training ship in Portsmouth harbour. The Dockyard Progress Books (ADM 180 Series) record that emergency repairs were carried out in 1887–1888, when the ship was re-coppered, apart from the keel. Now permanently docked since 1922, the copper sheathing was removed in the early 1960s

© 2018 The Authors. International Journal of Nautical Archaeology © 2018 The Nautical Archaeology Society. 

**Table 1.**

| Figure No | Ship | Mark description | Dimension | Dockyard or Manufacturer | Comment | Reference/Credit |
|---|---|---|---|---|---|---|
| 1a | HMS *Agamemnon* (1809) | **C** above **JAN 1807** | Ø19mm | Chatham | — | Uruguay Artefact sheet 923; courtesy of Oxford University MARE |
| 1b, 1c | HMS *Agamemnon* (1809) | **MR 28** | Ø19mm | Mines Royal Company | 28oz plate | Uruguay Artefact sheet 923; courtesy of Oxford University MARE |
| 1d | HMS *Pomone* (1811) | **C** above **DEC 1804** | Ø19mm | Chatham | — | Peter Hales |
| 1e | HMS *Pomone* (1811) | **MR 32** | Ø19mm | Mines Royal Company | 32oz plate | Peter Hales |
| 1f | HMS *Sirius* (1810) | **C** above **SEP 1808** | Ø19mm | Chatham | — | Yann von Arnim |
| 1g | HMS *Sirius* (1810) | **P°28** | Width 15.5mm | Portsmouth Dockyard's Rolling Mill | 28oz sheet | Yann von Arnim |
| 1h | HMS *Amethyst* (1811) | broad arrow, **PL** and **JUL 1810** | See scale on 1h | Plymouth | 32oz shard | 3H Consulting Limited |
| 1i | HMS Forte (1858–1906) | **S** above **MAR 1859** | Ø19mm | Sheerness | — | John P. Bethell |
| 1j | HMS Victory 1768–present | **Po MAY 1823** | Ø23.5mm | Portsmouth | 28oz plate | John Bingeman |
| 1k | HMS Victory 1768–present | **OCT 1888** | Ø30mm | Portsmouth | 28oz plate | John Bingeman |
| 1l | HMS Victory 1768–present | **P.D OCT 1888** | 5mm figures & letters | Portsmouth | 28oz plate | John Bingeman |

since it trapped rainwater, causing the hull timbers to rot. The examination of the removed copper revealed 21 different manufacturers' and Admiralty inspectors' marks (Bingeman *et al.*, 2000). The majority of the sheathing was dated 'OCT 1888' (Fig. 1j) and a few marked 'P.D OCT 1888' (Fig. 1k), the date of *Victory*'s last major re-sheathing. There was a single earlier date of 'MAY 1823' (Fig. 1l).

HMS *Gannet* (1878–present) was docked at Sheerness while being prepared to become TS *President*, the Royal Naval Volunteer Reserve London drill ship, on 16 May 1903. In March 1903, prior to departure, the ship was re-coppered with sheets stamped 'S' over 'MAR 1903' (Fig. 2a, Table 2). Dating copper sheets had been the dockyard's practice for over a hundred years; it is interesting to know that this practice was still continuing at the start of the 20th century. The Historical Diving Society provided a sample of *Gannet* copper sheet removed during the 2002–2004 restoration. When much later cleaning off the oxidation, the manufacturer's mark 'B.B.CoLd' and '28OZ' were found (Fig. 2b); the former stood for the Birmingham Battery & Metal Company (1836 until the 1980s) and the sheet weighed 28oz per square foot. The company's name, 'Battery', had no connection with modern electrical batteries, but referred to the firm 'battering' metal ingots into plate. In 1871 the company opened a new copper refinery and rolling mill at Selly Oak in Birmingham, where *Gannet*'s sheathing would have been manufactured. The company had been very proud of winning an Admiralty contract and, uniquely, their broad arrow marks were embossed to reflect this contract (Fig. 2c). All the other examples from many sources had been stamped with a broad arrow.

## Portsmouth copper rolling mill

While the practice of buying copper plates from industry continued for some time, in about 1805 the Admiralty started recycling used copper in their rolling mill at Portsmouth Dockyard (Hay, 1863: 81–82). Examples of Admiralty rolling mill copper plates are easily identifiable from each sheet's weight marked in large figures. Each plate must have been individually weighed and hand stamped (Fig. 2d). Other *Victory* plates examined bear the stamp marks '8lb 7oz', '7lb 14oz', and at least one had '28' with no other marks. It is believed that as production increased, confidence in the consistency of metal thickness was established; it was no longer necessary to weigh each individual sheet. Sometime after 1805 sheets were stamped 'P°28' with a broad arrow (Fig. 2e, see also Fig. 3j-k, Table 3). While the early marks had no other number

 © 2018 The Authors. International Journal of Nautical Archaeology © 2018 The Nautical Archaeology Society.

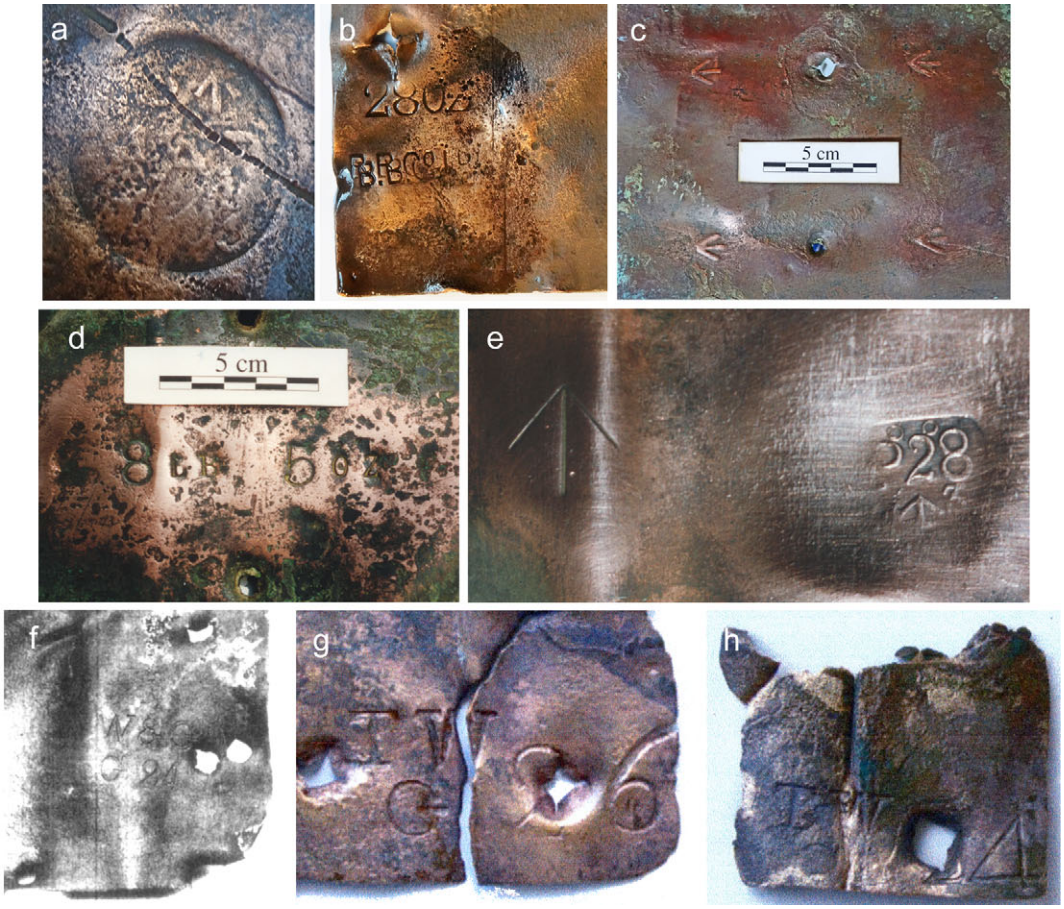


*Figure 2.* Sheathing marks from HMS *Gannet,* HMS *Victory, Cleopatra's Barge (*1817–1824), and the lugger *Coureur* (1818–1821), see Table 2.

**Table 2.**

| Figure No | Ship | Mark description | Dimension | Dockyard or Manufacturer | Comment | Reference/Credit |
|---|---|---|---|---|---|---|
| 2a | HMS *Gannet* | **28OZ** and **B.B.Co Ld** | Letters 4mm high | Birmingham Battery Co. | — | John Bingeman |
| 2b | HMS *Gannet* | broad arrow, **S/MAR/1903** | Ø20mm | Sheerness | — | John Bingeman |
| 2c | HMS *Gannet* | Embossed arrow heads | 15mm arrows | Birmingham Battery Co. | — | John Bingeman |
| 2d | HMS *Victory* | **8lb 5oz** | 7.5mm figures and letters | Portsmouth | Hand punched | John Bingeman |
| 2e | HMS *Victory* | **P28**, **3** broad arrow | Width 15.5mm | Portsmouth | | John Bingeman |
| 2f | *Cleopatra's Barge (*1816–1824 | **W&G/G 24** | — | Salem, Massachusetts | 24oz | Eric Long, Courtesy of the Smithsonian |
| 2g | *Coureur* (1818–1821) | **TW/G 26** | 'T' 6mm high | Mauritius | 26oz | Yann von Arnim |
| 2h | *Coureur* (1818–1821) | **TW/G 24** | 'T' 6mm high | Mauritius | 24oz | Yann von Arnim |

© 2018 The Authors. International Journal of Nautical Archaeology © 2018 The Nautical Archaeology Society. 


*Figure 3.* Privately countermarked coins, see Table 3.

**Table 3.**

| Fig. No. | Dockyard | Coin | Mark | Credit/Refrence |
|---|---|---|---|---|
| 3a | Deptford | Ø22–23mm blank | **D/MAR/**[17]**97** | Michael Knight |
| 3b | Deptford | 1807 halfpenny | Broad arrow **D/**[DE]**C/182**? | Michael Knight |
| 3c | Woolwich | 1799 halfpenny | Broad arrow **W/AUG/** [17]**99** | G.G. Brunk |
| 3d | Sheerness | 1821 halfpenny | **S** broad arrow**/MAR 1821** | Michael Knight |
| 3e | Chatham | 1813 halfpenny | Broad arrow **C/JUN/1813** | G.G. Brunk |
| 3f | Portsmouth | halfpenny-size blank | Broad arrow **Po/JUN/1802** | Michael Knight |
| 3g | Portsmouth | 1823 halfpenny | Broad arrow **Po/AUG/1823** | Michael Knight |
| 3h | Portsmouth | penny | **P.D/DEC/1876** | Michael Knight |
| 3i | Portsmouth | penny | **P.D/NOV/1876** | Michael Knight |
| 3j | Portsmouth | Taylor & Moody Southampton 1791 halfpenny token | **Po/28oz/broad arrow** | Michael Knight |
| 3k | Portsmouth | Square of copper | broad arrow **P.º 28/4** | Michael Knight |
| 3l | Portsmouth | 1797 cartwheel penny | **Pº28ºz/**broad arrow | G.G. Brunk |

within the stamp (Fig. 3j), subsequent ones had an additional figure (Figs. 2e and 3k). The reason for the '3' and '4' set within the stamp is not known, but perhaps represents a batch number.

With the introduction of iron ships, the large quantity of copper sheathing needed by the Navy had ceased resulting in the closure of Portsmouth Dockyard Rolling Mill in 1847. *Victory*'s final re-sheathing took place in October 1888; copper sheathing from 11 different companies was discovered when removed in the 1960s (Bingeman *et al.*, 2000: 227).

In 1812 an observation was expressed by Mr Pascoe Grenfell MP in the House of Commons about the quality of Portsmouth Dockyard's Rolling Mill product:

> Mr Grenfell observed that in the (Naval) estimates he saw no statement of the expense of the establishment formed

 © 2018 The Authors. International Journal of Nautical Archaeology © 2018 The Nautical Archaeology Society.

> some years ago in Portsmouth yard, for melting and re-manufacturing copper sheathing. In any observations he might make upon the subject, he did not mean to impute any blame whatever either to the Admiralty or the Navy Board; but having been in the dockyard at Portsmouth last summer, he had inspected the copper sheathing made there, and did not hesitate to say, that it was of a quality that would have caused rejection by any private shipbuilders in the kingdom; he had also reason to believe that this inferior article cost the public much more than good copper could have been obtained from the private manufactories of the kingdom (Hansard, 22 February 1812).

Grenfell was a copper-sheathing manufacturer, so he could be considered to have a biased view. He did make two valid points: each sheet had to be weighed suggesting some production inconsistency, while the task of having to weigh each sheet would increase labour costs. The MP was not entirely unsupported when Hay wrote in 1863 how 'no new copper had been brought into the Service from 1815 to 1832' (Hay, 1863: 81–82). Clearly the continued recycling of previously used copper sheathing was having a detrimental effect on quality. When Portsmouth's copper rolling mill closed in 1847, a new facility was erected at Chatham Dockyard (Hay, 1863: 81).

## Early manufacturers' marks

Two early 19th-century sheathing marks unconnected with the Royal Navy are currently known. The 'W&G' stamp recovered from the yacht *Cleopatra's Barge* (1817–1824) wrecked in Hanalei Bay, Hawaii, is attributed to copper manufactured by the Williams & Grenfell Company (Fig. 2f). 'TW' examples recovered from the lugger *Coureur* (1818–1821) can be related to copper manufactured by Thomas Williams in Cornwall (Fig. 2g). The vessel had been built in Mauritius and was wrecked there while actively involved in the illegal slave trade.

The Welsh Thomas Williams of the Williams & Grenfell Company ('W&G') should not be confused with the Cornish Thomas Williams ('TW'). The Welsh Thomas Williams (1737–1802) was the famous 'Copper King' who bought the Parys and Mona Mines in Anglesey and collaborated with Pascoe Grenfell (1761–1838) to form the Williams & Grenfell Company. On Thomas's death in 1802, his son Owen continued the partnership, as Owen Williams & Pascoe Grenfell Company, which later split into separate companies (Goskar, 2014).

What does the letter 'G' in 'G 24' mean, as seen stamped on the *Cleopatra's Barge*'s copper (Fig. 2f)? Firstly, the Imperial Standard & Old Birmingham Wire Gauge thickness measured 0.022 inches (0.5588mm). This does not match the *Cleopatra's Barge*'s copper thickness marked as 'G 24'. The measurement of ten sample thicknesses closely clustered around 0.032 inches (0.8128mm), the same thickness found on 24oz per square foot copper plate (CDA, 1935: 68). One can confidently conclude that 'G 24' represents 24oz plate (pers. comm., P. Johnston, 13 September to 4 October 2002). Similarly, from Mauritius, *Sirius'* 'G 26' copper measured 0.87mm (0.03425 inches), the expected thickness for 26oz plate (pers. comm., Y. von Arnim, 19 May 2017). While 'G' is likely to stand for 'Gauge', its use pre-dates both the known Old Birmingham Wire Gauge and the Imperial Standard Wire Gauge measurement systems when 'G' was also used.

Welsh Anglesey copper was considered superior to the Cornish copper since the latter contained bismuth, an impurity that created a crystalline structure causing embrittlement during rolling. This problem is rather borne out by the visible surface cracks in Thomas Williams's copper (Fig. 2g-h).

## Dutch ship coppering

The Dutch Fifth Rate 36-gun *Alphen* (1766–1778) exploded at Curaçao, in the Lesser Antilles. The ship had been coppered in 1777 with sheets that measured 1.20 × 0.35m, which closely equates to 48 × 14 Imperial inches (van Duivenvoorde, 2015: 354). The plates might have been manufactured in England since the delivery would have been made before the 1780's ban on exporting copper sheathing.[1] While *Alarm* had been coppered in 1761, the sheathing of *Alphen* pre-dates the general coppering of the British fleet that started in 1779.

Before metric measurements were introduced during the Napoleonic period, Europe was still using feet and inches, although these units varied in length throughout Europe. The Dutch *Alphen* measured 139 and 8/11 Amsterdam feet. The Amsterdam foot was equivalent to 11¼ Imperial inches. Three Paris feet equalled one metre, the internationally accepted metre length today. It appears that the British standard sheathing plate size of 48 × 14 inches (1.219 × 0.356m) was adopted as the general international size throughout Europe and in the United States of America (James *et al.*, 1991: 86). The two sheathing plates recovered off Terschelling manufactured by the German company Krusauer Kupper Und Messingfabrik at Krusau followed Imperial measurements in the late 19th century and may date back to the time of the Hanseatic League (pers. comm. Nico Brinck, 14 October 2016).

## Countermarked coins

This paper increases the number of known dockyards' sheathing marks, by introducing countermarked coins. It now seems clear that dockyard workers used these copper-sheathing franking punches to make mementos. The following examples are of interest because they confirm that Deptford (Fig. 3a-b) and Woolwich (Fig. 3c) also sheathed ships. Portsmouth Dockyard used 'P', then 'Po' and later 'P. D', first seen on coin countermarks for 1876 (Fig. 3h) and when re-sheathing *Victory* in October 1888 (Fig. 1j-k).

© 2018 The Authors. International Journal of Nautical Archaeology © 2018 The Nautical Archaeology Society. 


*Figure 4.* Examples of Muntz metal marks, see Table 4.

The earliest copper-sheathing date known from a countermarked coin is a Woolwich mark for 'APR (17)93' (Gavin Scott, 1975: 85), while a Deptford Dockyard countermark is known dated 'MAR/(17)97' (Fig. 3a). This stamp is roughly made, while future stamps became more refined and included broad arrows. The final date stamp recorded belongs to Sheerness Dockyard, 'MAR/1903' (Fig. 2a). Further examples are listed in the Appendix (Brunk, 2003).

## Muntz metal and merchant vessels

In 1861 John Percy reported:

> Muntz's metal, or yellow-metal sheathing, has entirely superseded copper-sheathing in the merchant service, though the latter is still retained in the Navy. Its special advantages are stated to be, that it keeps the bottoms of ships cleaner and costs considerably less than copper-sheathing. (Percy, 1861: 619)

George Frederick Muntz (1794–1858) had insufficient factory capacity to meet demand for his sheathing, so under his licence other companies were contracted both at home and abroad (Flick, 1975: 78). The 60:40% copper-zinc mix was superseded by a 63:37% composition that could be cold rolled to thinner gauges than the original, which was limited to being ductile only during hot rolling. Muntz's younger brother, Philip Henry Muntz (1811–1888), took over running the company on George's death in 1858

 © 2018 The Authors. International Journal of Nautical Archaeology © 2018 The Nautical Archaeology Society.

**Table 4.**

| Figure No. | Ship/Site | Mark | Dimension | Manufacturer | Comment | Credit/Reference |
|---|---|---|---|---|---|---|
| 4a | Terschelling Island, Holland | **20** and **41** | round | Muntz | — | Nico Brinck, Museum Behouden Huys, Terschelling |
| 4b | Terschelling Island, Holland | **22** and **34** | Round Ø30mm | Muntz | — | Nico Brinck, Museum Behouden Huys, Terschelling. |
| 4c | *Snow Squall* (1851–1864) | **24** and **21** | Double oval | Muntz | — | Vin Callcut, www.oldcopper.org |
| 4d | Newhaven Museum | **24** and **28** | round | Muntz | — | Ed and Biddy Jarzembowski |
| 4e | Bracklesham Beach, W. Sussex | **24** and **33** | round Ø35mm | Muntz | — | Found by M. Rule, photo J. Bingeman |
| 4f | Coast off Galveston, Texas | 3 crowns **18** and **7** | Double oval | P. H. Muntz | Curated by Corpus Christi Museum of Science | Thomas J. Oertling, Artefact: #00563, 41-GV-127. |
| 4g | Terschelling Island, Holland | 3 crowns/ **22** and **18** | Double oval 42 × 32mm | P.H. Muntz | — | Nico Brinck, Het Wrakkenmuseum, Terschelling |
| 4h | *Snow Squall* (1851–1864) | **24** and **14** | Double oval | Muntz | — | Carlson *et al.*, 2010: 75, fig. 3 |
| 4i | *Petrel* (1847–1853) | **26** and **2** | Double oval | Muntz | — | Peta Knott |
| 4j-k | Cape Remain, S. Carolina, USA | **26** and **3** | Double oval | Muntz | Dezincified 26oz Muntz metal | E. Lee Spence |

and expanded output, with his heirs continuing the company until 1921. It was Philip's grandson, Gerald Muntz, who sold the company to the Imperial Metal Industries that later became ICI Metals Limited (Flick, 1975: 88).

'Eighteen vessels in Her Majesty's service have been sheathed with Muntz's yellow metal, and from reports it has appeared to wear well' (Hay, 1863: 92). The central figures 18, 20, 22, 24 and 26 are confidently assumed to be their weight in ounces per square foot of metal (Fig. 4, Table 4). The Muntz seal rim numbers remain a mystery; they are assumed to be some internal company coding. The numbers found were: 2, 3, 7, 21, 24, 28, 33, 34, 41, 44 and 74. Most of these sheathing pieces have been recovered from the North-Sea-facing Dutch coast on Terschelling and Texel islands without any provenance to decode their meaning. Most shards are held at Terschelling in the 'Behouden Huys' Museum and Wreck Museum (Het Wrakkenmuseum) (pers. comm., N. Brinck, 1 June 2017).

The 26oz example (Fig. 4i) comes from the Australian ship *Petrel* (1847–1853), a 195-ton barque built in Tasmania and wrecked off Hope Beach, Tasmania (McCarthy and Stanbury, 2003). The vessel's short life suggests that this could be its original sheathing. The *Snow Squall* (1851–1864) was a 742-ton clipper ship abandoned in 1864 at Stanley in the Falkland Islands. Its last sheathing was carried out in 1862 during a repair at Singapore in 1863 (*The Strait Times*, 19 May 1863: 2, 5, 16). The ship's bow section has been rescued and is now on display in the Maine Maritime Museum in Bath, Maine, USA. Analysis of the Muntz metal (Fig. 4h) showed sample averages of Cu 64½%, Zn 37½% (Carlson *et al.*, 2010: 78).

An unidentified wreck at Cape Remain, South Carolina, USA, was coppered with typical Muntz 26oz 14 × 48 inches (1.219 × 0.3556m) plate that has been subject to dezincification while static on the seabed, which has given it the appearance of copper rather than a copper-zinc brass (Fig. 4j) (sample provided by Dr E. Lee Spence). The plate was applied with great care using copper-nail holes evenly spaced, with edge nails set 2 inches (50.8mm) apart and 4 inches (101.6mm) apart for the central securing nails. It is likely that these holes were pre-punched by a machine similar to the French system (le Bot, 1977: 43) (Fig. 5).

A piece of brass sheathing manufactured by 'C. LAMBERT – SWANSEA' has been recovered from Turtle Rocks near Beacon K in the Florida Keys National Marine Sanctuary (Fig. 6a-b, Table 5). Its yellow colour confirms that it is similar to Muntz metal. Charles Lambert & Co. (1852–1902) could have been manufacturing ships' sheathing with the approval of George Frederick Muntz who had granted

© 2018 The Authors. International Journal of Nautical Archaeology © 2018 The Nautical Archaeology Society. 

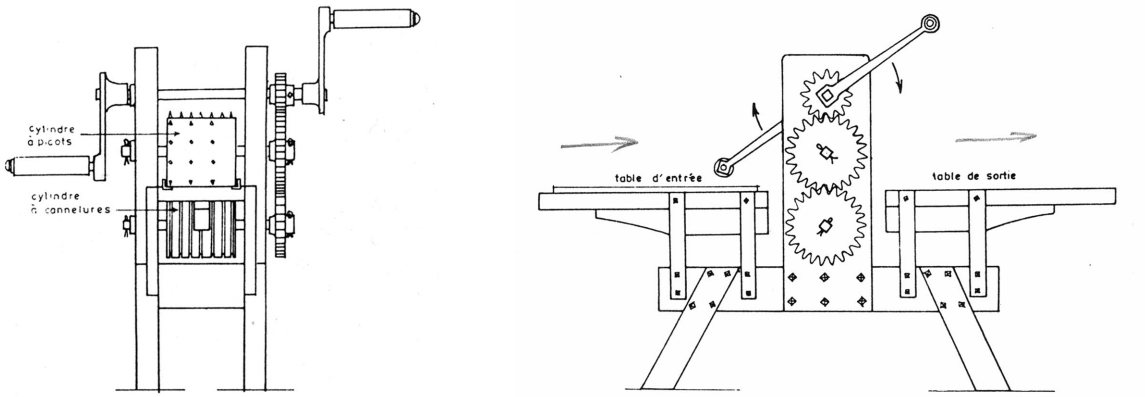


*Figure 5.* Drawings by J. le Bot in his paper 'Le doublage en cuivre des terre-neuvas' (published in *Le Petit Perroquet* 21, 1977: 43).


*Figure 6.* Other manufacturers' marks, see Table 5.

licences to other companies to manufacture Muntz metal, paying a royalty of £2 on each ton (Flick, 1975: 78). The most likely source for the sheathing was the British barque *Whalton* (1854–1859) (pers. comm. Denis B. Trelewicz February 20, 2004), which temporarily grounded on Turtle Rocks 4 August 1858. Lloyd's Register 1858 lists the 220-ton *Whalton*'s hull as 'Felt & sheathed with Yellow Metal' with a Port of Registry at Blyth (Guildhall Library Lloyd's Register report 18422, dated 21 January 2004). Five months later on 15 January 1859 the ship was driven ashore in St Georges Bay, Beirut, during a gale and subsequently condemned.[2]

A recent discovery of a complete 48 × 14 inches (1.219 × 0.356m) plate of Muntz-type yellow metal stamped 'E. F. GIVET' was found by divers in the North Sea off Den Helder (Fig. 6c-d). This brass factory was owned by the Estevan Frères (Brothers) between 1835 and 1878, who used the name 'E. F.' only from 1868 (pers.comm. Nico Brinck 27 March 2017). 'GIVET' is a district in the Ardennes on the Belgian-French border.

 © 2018 The Authors. International Journal of Nautical Archaeology © 2018 The Nautical Archaeology Society.

**Table 5.**

| Figure No. | Ship/Site | Marks | Dimension | Manufacturer | Comment | Credit/Reference |
|---|---|---|---|---|---|---|
| 6a-b | Turtle Rocks, Florida Keys National Marine Park | **20oz** | Double oval, width 38mm | C. Lambert, Swansea | — | Denis B. Trelewicz |
| 6c-d | Wreck off Den Helder, Holland | **E.F. GIVET** | Brass plate 48 × 14 inch | Estevan Frères, Givet (1835–1878) | Mark used: 1868–1878, plate found by divers from Den Helder | 6c: Nico Brinck, the plate is in a private collection. 6d: Drawing by Rob Kennedy |
| 6e | Site G, Galle, Sri Lanka | **NANTES'** | c.24mm wide | Rolling Mill in Nantes, France | — | Patrick Baker, Western Australian Museum |
| 6f-g | Terschelling, Holland, found on the beach | **18oz** | Double oval | H. J. Enthoven & Sons, Matlock | — | Nico Brinck, Wreck Museum Terschelling. |
| 6h | *Detmar* (1869–1894) Sank West of Terschelling 27/2/1894 | **26uz** | round | Krusauer Kupfer Und Messingfabrik, Krusau, near Flensburg | Sheet 1 Two-masted brigantine | Nico Brinck, Wreck Museum Terschelling. Found by divers |
| 6i-j | *Detmar,* idem | **KUPF U 22uz** | round | Krusauer Kupfer Und Messingfabrik, Krusau, near Flensburg | Sheet 2 Both plates 48 × 14 inches | Nico Brinck Wreck Museum Terschelling. |
| 6k | *Victory* removed in the 1960s | **32oz** | Oval Widths Out/Inner: 31/16 mm | Vivian & Sons, Swansea | Marking no 'Ltd' 28oz example had 'Ltd'. | Vin Callcut, Private collection |
| 6l | Found on the beach of the Island of Texel, Holland | **VS/20oz/980** | Double oval | Vivian & Sons Sheathing | Vivian's had acquired Morriston in 1841 at Birmingham for Muntz metal. | Nico Brinck, the mark is in a private collection on Texel. |

Wreck G at Galle, Sri Lanka, probably the 1100-ton Dutch East Indiaman *Geinwens* (1765–1776), had a copper/zinc alloy (Cu 65% Zn 35%) sheet stamped with the place name 'NANTES' (van Duivenvoorde, 2015: 8) (Fig. 6e). *The London Encyclopædia* published in 1829 reported that the city of Nantes had 'brass-foundries' and a shipyard capable of handling vessels up to 1000 tons. From the mid 19th century a suitable brass for sheathing ships would be a 65:35 copper-zinc alloy, an improvement on Nantes's general coppering tradition (L.E., 1829: 371). One of these foundries could have operated a rolling mill to supply ships' sheathing, hence the NANTES trademark.

H.J. Enthoven & Sons was founded by Henry James Enthoven in 1820. Over the past 200 years his company has diversified in many ways. Based on the survival of sheathing found under water off the Netherlands stamped with the company name and '18oz' at the centre (Fig. 6f-g), Enthoven's must have operated a brass rolling mill producing Muntz-type ships' sheathing. During World War 2 its products were used by the Royal Aircraft Establishment, and more recently they became lead smelters and refiners, specializing in products of lead, tin, solders and rigid plastic pipes.

Two plates of sheathing manufactured by the German Company Krusauer Kupper Und Messingfabrik at Krusau near Flensburg have been recovered from the wreck of the German two-masted brigantine *Detmar* (1869–1894) (Fig. 6h-j), sunk off the north-east end of Terschelling in a storm on 27 February 1894; the crew survived. The plates measured 48 × 14 inches (1.219 × 0.3556m) and can be described as 'Muntz metal' (pers. comm. Nico Brinck, 14 October 2016).

By the 1840s Vivian & Sons, founded in 1809, was producing 25% of the United Kingdom's entire

© 2018 The Authors. International Journal of Nautical Archaeology © 2018 The Nautical Archaeology Society. 

copper production. In 1841 Vivian's took over the abandoned Birmingham copper works (Hughes and Reynolds, 1992: 33) to start the Morriston zinc smelter works. In the following year, since zinc was a major component, they started manufacturing Muntz metal (Grace's Guide). Evidence from another shipwreck found on the island of Texel, Holland shows 'VS' as Vivian's trademark when manufacturing Muntz metal, confirmed by the word 'Vivian' just visible on the stamp rim (Fig. 6l). Below the 'VS' trademark are '20oz' stamps denoting the plate's weight per square foot, as well as '980'. The latter might be a delivery batch number; if records still exist it could identify this unknown wreck. Vivian & Sons copper 28oz sheathing was also used on and removed from HMS *Victory* when re-coppered in 'OCT 1888' (Fig. 1k) (Bingeman *et al.*, 2000: 225, 227). A 'Vivian 32oz' copper mark was found among *Victory*'s sheathing sold in 2000 (pers. comm. Vin Callcut 9 April 2018) (Fig. 6k).

Fullerton & Raymond of Boston were the sole agent for Muntz Metal in the USA (*Portland Argus*, August 3, 1850). They advertised thicknesses from 16–28oz per square foot and continued the British standard size plate of 48 × 14 inches (1.219 × 0.3556m). The re-sheathing of the *General Comstock* (1895–1913) in February 1911 by the Taunton New Bedford Copper Company (1900–1928) of Massachusetts used American Yellow Metal with a microanalysis of: Cu 67%, Zn 32.4%, and Fe 0.34% (Fig. 7) (James *et al.*, 1991: 86). Whether Taunton's had manufactured the Muntz metal or bought it from the Muntz-licensed company Fullerton & Raymond is uncertain.

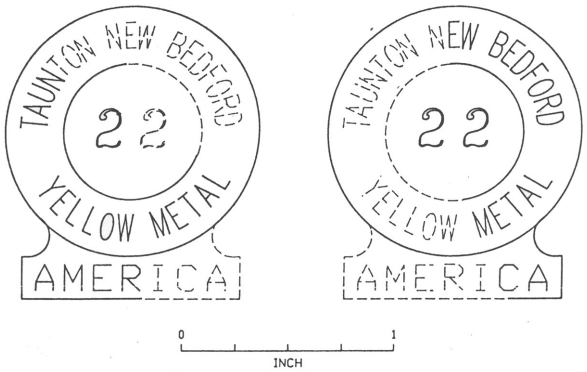


*Figure 7.* Drawing of a 22oz sheathing mark recovered from the wreck of the *General Comstock* (James *et al.*, 1991: 86).

## Conclusion

This note illustrates the importance of understanding the history and development of ship hull sheathing from the 1780s right up to the end of the 20th century, when the Royal Navy still used non-magnetic Muntz metal on minesweepers to protect their hulls while sweeping magnetic mines (Bingeman *et al.*, 2000: 224). It also includes countermarked coins, an illicit practice, that provide further Royal Dockyard identification marks, which were previously unknown (Fig. 3). This note will be a useful reference when new wrecks are discovered assisting with their identification.

John M. Bingeman
*5 Rumbolds Close, Chichester, West Sussex, PO19 7UJ, UK, john@bingeman.co.uk*

## Acknowledgements

I am most grateful to Mr Nico Brinck from Holland who has provided much of this note's information. To my old friend Mr Vin Callcut (Antique Metalware Society/The Historical Metallurgy Society), who answered many of my queries; to Michael Knight for introducing me to coin countermarks. Also to: Mr Yann von Arnim, President, Historical Society of Mauritius and Vice-President, Mauritius Marine Conservation Society; the late Major Denis B. Trelewicz, Vice-President of the Historical Preservation Society of the Upper Keys, and Dr E. Lee Spence both from the USA; Dr Paul F. Johnston, Curator of Maritime History at the Smithsonian Institution; and Mallory R. Haas for their many contributions.

## Notes

1. Royal Proclamation: 20 Geo. III, cap. 59: imposing a £100 fine per hundredweight, on any contravention.
2. Libraries and Guildhall Art Gallery, London. Letter to Major Denis B Trelewicz dated 21 January 2004.

## Appendix: marks listed by Brunk (2003)

Chatham (broad arrow and 'C') on halfpennies for: 'NOV 1812', 'AUG 1813', 'SEP 1814' and 'APR 1818'.

Deptford (broad arrow and 'D') on halfpennies for: 'JUL 1804' and 'DEC 1820'.

Portsmouth (broad arrow and 'P') on Irish halfpenny 'NOV 1827', on a farthing for 'MAR 1860', and a penny for 'MAY 1860'.

Sheerness (broad arrow and 'S') on halfpennies for 'JAN 1841', 'JUN 1845', 'SEP [date illegible]', and Irish halfpenny for 'JUN 1831'.

Woolwich (broad arrow and 'W') on halfpennies for 'JUNE (17)98', 'SEP 1806', 'JUL 1809' and on a counterfeit farthing with 'APR (17)93'.

 © 2018 The Authors. International Journal of Nautical Archaeology © 2018 The Nautical Archaeology Society.

## References

Bingeman, J.M., Bethell, J.P., Goodwin, P. and Mack, A.T., 2000, Copper and other sheathing in the Royal Navy. *IJNA* **29.**2, 218–229.

Bonnefoux, P-M-J. de and Paris, F-E., 1856 (2nd edn 1987), *Dictionnaire de la marine à voile*. Paris: Editions de la Fontaine au Roi.

Brunk, G.G., 2003, *Merchant and Privately Countermarked Coins*. Rockford, Illinois.

Carlson, M.O., Ronnberg, E.A.R. Jr, Lipfert, N.R. and Scott, D.A., 2010, *Technical Analysis of Muntz Metal Sheathing from the American Clipper Ship* Snow Squall *(1851–1864)*. Charleston, South Carolina.

CDA, 1935, Copper Development Association Publication No.12 *Copper Data*, Radlett, Hertfordshire, England.

Colledge, J.J. and Warlow, B., 2006, *Ships of the Royal Navy*. London.

Flick, C., 1975, Muntz metal and ships' bottoms: the industrial career of G.F. Muntz. *The Proceedings of the Birmingham & Warwickshire Archaeological Society* **87**, 78–88.

Gavin Scott, J., 1975, *British Countermarks on Copper & Bronze Coins*. London.

Goskar, T., 2014, Where did all the copper go? Reconstructing supply chains between mines and smelters. *Journal of the Trevithick Society* **41**, 128–145.

Grace's Guide, *British Industrial History for Vivian and Sons*: http://www.gracesguide.co.uk/Vivian_and_Sons. (Accessed 10.5.17)

Hay, W.J., 1863, On copper and other sheathing for the Navy. *Proceedings of the Institution of Naval Architects* **4**, 79–98.

Hughes, S. and Reynolds, P., 1992, *A Guide to the Industrial Archaeology of the Swansea Region*. Royal Commission on the Ancient & Historical Monuments of Wales.

James, S.R. Jr, Pearson, C.E., Hudson, K. and Hudson, J., 1991, *Archaeological and Historical Investigations of the Wreck of the Gen. C.B. Comstock, Brazoria County*, *Texas*. Report by Coastal Environments Inc. to US Army Corps of Engineers-Galveston District.

le Bot, J., 1977, *Le Petit Perroquet* **21**, 41–48.

L.E., 1829, The London Encyclopædia) Volume XV, *Nantes*. London: Thomas Tegg.

McCarthy, M. and Stanbury, M., 2003, The structure of the *Eglinton*, its associated fastenings and fittings, in M. Stanbury (ed.) *The Barque* Eglinton *wrecked Western Australia 1852. The history of its loss, archaeological excavation, artefact catalogue and interpretation*, 47–70. Australian National Centre of Excellence for Maritime Archaeology, Special Publication No. 6. The Australasian Institute for Maritime Archaeology, Special Publication No. 13.

NMM (National Maritime Museum, Greenwich) ADM 354/216/126 letter dated 27 July 1804

Percy, J., 1861, *Metallurgy; The Art of Extracting Metals from the Ores*. London: John Murray.

Tomalin, D.J., Simpson, P. and Bingeman, J.M., 2000, Excavation versus sustainability *in situ*: a conclusion on 25 years of archaeological investigations at Goose Rock, a designated historic wreck-site at the Needles, Isle of Wight, England. *IJNA* **29.**1, 3–42.

van Duivenvoorde, W., 2015, *The use of copper and lead sheathing in VOC shipbuilding*. *IJNA* **44.**2, 349–361.

© 2018 The Authors. International Journal of Nautical Archaeology © 2018 The Nautical Archaeology Society. 